NAVAL FACILITIES ENGINEERING SERVICE CENTER
Port Hueneme, California 93043-4370

Special Publication
SP-2091-SHR

ACCELERATED TESTING OF FIBER REINFORCED POLYMER MATRIX COMPOSITES - TEST PLAN -

by
A. Caceres, R.M. Jamond, T.A. Hoffard, L.J. Malvar

August 2000

Approved for public release; distribution unlimited.

PRINTED ON RECYCLED PAPER

EXECUTIVE SUMMARY

The Naval Facilities Engineering Service Center (NFESC), under the sponsorship of the Office of Naval Research (ONR), studied the effects of laboratory simulated marine climates on the mechanical properties of several commercial composites. These composites included glass-reinforced polyesters, vinylesters, phenolics, and an epoxy (epoxy-polyamide). The composites were based on thermoset resins and all samples were pultruded by one manufacturer in order to standardize the tests. Results indicated that exposure to seawater caused the greatest deterioration of the flexural and tensile strengths of the composites.

It is proposed to conduct accelerated testing on fiber reinforced composites used in the Navy waterfront infrastructure. Accelerated testing will be completed under salt-fog exposure at high temperatures up to 160°F. This data can be complemented by existing 12-month data at 95°F already obtained under a previous program. The accelerated testing will allow for prediction of damage to the composites beyond the first year, and prediction of its service life.

Note:

Professor Arsenio Caceres was a visiting Professor, on leave from the University of Puerto Rico, Mayaguez Campus. He spent a summer at NFESC under the U.S. Navy-ASEE (American Society for Engineering Education) Program sponsored by the Office of Naval Research.

TABLE OF CONTENTS

INTRODUCTION **1**

BACKGROUND **1**

DEGRADATION MECHANISMS **2**

TIME-TEMPERATURE EQUIVALENCE **3**

PROPOSED TESTING PROGRAM **4**

SPECIMENS 4
TEST TEMPERATURES 5
EXPERIMENTAL PROCEDURE 5
TESTING 6
Equipment *6*
Description of tests *7*

CONCLUSIONS **8**

REFERENCES **8**

APPENDIX - NUMERICAL EXAMPLE ON THE USE OF TIME-TEMPERATURE SUPERPOSITION **10**

INTRODUCTION

It has been shown that seawater immersion and salt-fog exposure are the main causes of degradation of glass fiber reinforced plastics (GFRP) materials for use in the Navy waterfront infrastructure [1]. Experimental data is also available for the results of accelerated testing under similar exposures [1, 2]. However, this data must be correlated and extrapolated to obtain the degradation under natural conditions. This experimental program seeks to provide this correlation, and determine the acceleration factor, *k*, needed to determine the long-term degradation under natural conditions. This acceleration factor is based on the time-temperature equivalence, which has been used for similar applications.

BACKGROUND

It is very difficult to analyze durability by means of accelerated aging tests because the mechanisms that promote degradation are not well understood and correlation with natural exposure is often lacking. However, accelerated aging tests are needed to gain information on the durability of a material within a reasonable time frame. In particular, Aindow, Oakley, and Proctor showed that long-term aging predictions of GFRP, based on testing specimens at high temperatures, correlate well with real weather aging [3]. This theory is summarized by means of the time-temperature superposition method.

The U.S. Navy is currently retrofitting old concrete structures with composite components. One of the reasons for the use of composites is their expected longer durability. However, aging will inevitably occur and accurate knowledge of their durability under very specific exposures is necessary to design those components for their expected service life. Waterfront Navy structures mainly consist of reinforced concrete piers and wharfs under marine exposure. A previous test program determined that seawater immersion and seawater or salt-fog exposure are the main causes of deterioration of typical composite used in Navy structures. The current experimental program will address these two types of exposures. For these tests, the main condition that can be varied is temperature. Changes in salt concentration or salt-fog condensation rate would be more difficult to correlate with natural exposure. Other types of exposure include cold/freezing conditions, ultra-violet exposure, and dry heat. However, it was previously shown these exposures have little impact on the degradation of the composites.

Degradation consists of loss of strength and/or stiffness. The relationship between the decay during accelerated experimental testing and long-term testing is expressed through an *acceleration factor* k. The acceleration factor is the ratio between time exposures after natural aging and after accelerated aging to obtain a similar decay. For instance, an acceleration factor k = 400 means that every hour under accelerated laboratory aging testing corresponds to 400 hours of aging under normal conditions. If the property considered is the modulus of elasticity, *E*, the acceleration factor is given by:

$$k = \frac{dE_a / dt}{dE_l / dt} \qquad \text{Eqn. 1}$$

where E_a is the modulus of elasticity observed during the accelerated test and E_l is the same modulus under a long-term in-service test.

If k is constant, the following two equations can be written:

$$E_l = E_0 + \frac{1}{k}\left(E_a - E_0\right) \qquad \text{Eqn. 2}$$

$$E_l = E_0 + \frac{1}{k}\int_0^t \left(\frac{dE_a}{dt}\right) dt \qquad \text{Eqn. 3}$$

Equation 2 states that the change in E_a during the accelerated test will correspond to a constant change of E_l in the long-term test. Equation 3 can be integrated to yield the value of the property at any time, if the variation of E_a for the accelerated test, as a function of time, is known. However, this is hardly the situation for most degradation systems. The factor k will change with time or with E_a, and because of its nature E_l will be very sensitive to those variations.

One simple answer to this problem would be to establish an analytical model that can relate the degradation in terms of the variables involved (temperature, salt composition, etc.) This is very difficult to obtain since the degradation mechanisms are not well known in most cases. Furthermore, deviations from the model are likely to occur over long time. However, this approach was used by Porter and Barnes [4] for the degradation induced by alkaline corrosion on GFRP.

The other solution may be to setup a parametric study of degradation in terms of the exposure variables and time. Results may be data fitted to produce the degradation rate. However, for this method to have some reliability, at least a couple of years of data from natural exposure may be necessary. Taking into account the many variables involved, this may mean spending too many years collecting data. Porter and Barnes [4] relied on natural weathering data collected at different locations around the world with another set of data collected over 10 years to come up with an acceleration law. The acceleration factor obtained for an exposure of 120°F and higher pH (around 12) was 279.

Porter, Lorenz, Barnes, and Viswanath [5] developed two equations for accelerated aging of GFRP composites in a local environment. The first one gives an acceleration factor, AF, based on the mean annual temperature of a particular climate. The second one provides a relationship between the aging bath temperature and the number of acquired accelerated aging days in the bath.

DEGRADATION MECHANISMS

The type of damage that produces the degradation of a composite material has been typically classified as matrix damage (microcracks, coalescence of voids), fiber damage (breakage or buckling) or interface damage (debonding). Examples of fiber mechanisms of failure reported in the literature include local fiber buckling at elevated temperatures [6], and corrosion of glass fibers used to prestress or reinforce concrete beams [7]. Matrix

mechanisms have been predominant in composites exposed to environmental and corrosion conditions. Often, matrix cracking clears the way for other degradation mechanisms that will eventually cause the composite to fail. Finally, the fiber-matrix interface failure has been difficult to detect and measure quantitatively. Methods to characterize interfacial damage have been proposed by Jayamaran et al. [8]. SEM has been used to observe this mechanism in various types of composites.

TIME-TEMPERATURE EQUIVALENCE

In order to provoke accelerated aging, the exposure can be intensified by providing a higher temperature, a higher saline concentration, or a higher amount of fog. In the alkaline corrosion research performed by Porter and Barnes [4], the acceleration is accomplished by exposing the glass fibers to high pH values and immersing the fibers in a bath at an elevated temperature.

The acceleration mechanism obtained by increasing the intensity of the exposure should be studied separately and would require significant additional work. Another option is to keep the salt concentration and condensation rate constant, but expose the specimens to higher temperatures. This is the basis of the time-temperature equivalency. It allows the prediction of long-term properties based on short-term measurements of that property. It is based on the demonstrated fact that viscoelastic data obtained at one temperature can be superimposed on data obtained at a different temperature simply by shifting one of the data curves onto the other along the time axis. It is assumed that the processes involved in molecular rearrangements remain the same, but occur at greater rates at higher temperatures.

Dye et al. [9] have applied this principle to the slip in the anchor of fiber reinforced polymer (FRP) tendon anchor systems by heating the assembly for three hours. The acceleration factor obtained from ambient temperature to 160°F was in the order of the thousands, thus enabling extrapolation to 100 years, as reported. Gerritse [10] has used the Arrhenius model to develop data on the long-term performance of aramid/epoxy composites for prestressing tendons.

Acceleration by elevated temperature exposure is questionable where there is a change in degradation mechanism due to the elevated temperature. This is the case when the rate of degradation shows increase with time during certain stages of the interaction with the environment. This behavior is usually associated with a change in the nature of the interface region, such as cracking, phase transformation, or significant alteration of the chemistry. In such cases there is no alternative to mechanistic understanding of the degradation phenomenon in the development of service life predictions. The Arrhenius behavior (see Equation 5) can be expected only in cases where a single process controls the kinetics of the degradation. Therefore, this must be taken into account when using test data obtained at elevated temperatures.

The properties observed at one temperature are selected as the *reference curve*. The results for other temperatures are shifted onto the reference curve to obtain the *master curve*. The horizontal shift required for each curve to superimpose to the master curve is the *shift factor*, a_T, for that temperature. These shift factors are analyzed and data fitted with one of

the two models commonly accepted to describe viscoelastic behavior. The first one is the *Williams-Landel-Ferry (WLF)* model:

$$\log a_T = \frac{-C_1(T - T_0)}{C_2 + (T - T_0)} \qquad \text{Eqn. 4}$$

where C_1 and C_2 are constants obtained by regression, T is the temperature usually measured in Kelvin and T_0 is the selected reference temperature. The other model is known as the *Arrhenius* relation:

$$\log a_T = \log A + \frac{E}{R(T - T_0)} \qquad \text{Eqn. 5}$$

where A and E are material constants obtained by regression, and R is the gas constant. Once these constants are calculated, properties for longer periods of time can be computed. It is recommended that the master curve be shifted only to temperatures in the range in which the data was collected.

PROPOSED TESTING PROGRAM

The proposed testing program will be a continuation of the program recently finished by NFESC where seven GFRP specimens were tested under several types of marine exposures [1]. The same kinds of specimens will be used. In this new phase only the salt-fog exposure test will be conducted, as the previous study showed it was one of the most aggressive exposures.

In order to extrapolate the short-term behavior, the time-temperature equivalence principle will be used. It is assumed that six samples will be enough to give an accurate plot of the degradation curves for each temperature and specimen type. Once a final value of strength and/or stiffness is specified the durability of the composite will be determined.

Specimens

In addition to the seven FRP materials tested previously, a carbon FRP (CFRP) specimen will also be tested. Hence the eight materials will be as follows:

- Two glass reinforced vinylesters (I and II)
- Two glass reinforced polyesters (I and II)
- Two glass reinforced phenolics (I and II)
- One glass reinforced epoxy (epoxy-polyamide)
- One carbon reinforced epoxy

Test Temperatures

Each test for a specific temperature will be performed over a three-month period for a total testing duration of 9 months. Given the upper temperature range (95°F to 160°F) where the test chamber can operate, the test temperatures will be:

- 95°F
- 120°F
- 160°F

These temperatures are well below the glass transition temperatures of the selected thermosets, thus avoiding the inevitable change in degradation mechanism that occurs at that point.

Experimental Procedure

The data manipulation required for each specimen and exposure is as follows:

1. Remove one third of the specimens at one-month intervals.
2. Measure the desired property (strength or modulus of elasticity) after removal and plot the property in a three-point curve, one for each temperature. Use logarithmic scale for each axis.
3. Temporarily define a reference temperature (probably 95°F) onto which each curve will be shifted (note that 12 months data is available at this temperature from [1]).
4. Shift each curve onto the reference temperature curve. The average of the shifting distance may be used to define the shifting factor for each curve.
5. Draw the master curve as the superimposition of the individual curves shifted onto the reference curve.
6. Use data-fitting to find the shift-factor law. Use the Arrhenius or WLF model to approximate the shift-factor law.
7. Define the final reference curve (probably 73°F for ambient or 95°F for tropical exposure). Use the data-fit of previous step to find the shift factor for this temperature.
8. Shift the master curve to the new reference temperature.
9. Extrapolation is now possible within a reasonable time period. The obtained master curve will give the amount of degradation as a function of time and it will be possible to find the degradation in, for example, 30 to 40 years and compare it with the allowance or safety factors included in the design for long term exposure.

A numerical example of application of the principle can be seen in the Appendix.

Testing

Equipment

Three pieces of equipment will be needed:

1. **Salt fog test chamber -** with a temperature range capability from "ambient" to 160°F, and humidity from 95% to 100% during the high humidity test cycles, and less than 30% during dry off cycles.
2. **Scanning electron microscope**
3. **Dynamic mechanical analyzer -** ESC63 currently uses a dynamic mechanical analyzer (DMA) 983 for its dynamic mechanical thermal analyses. A majority of DMA analysis is done in a "fixed frequency" mode. The DMA uses a flexural bending deformation to apply stress to the sample. The sample undergoes a sinusoidal oscillation at a frequency and amplitude (strain) selected by the operator, and over a range of temperatures. The arms of the DMA move back and forth in the horizontal plane to flex the specimens at specified frequencies (Figure 1). For viscoelastic materials such as polymers (having both elastic and viscous properties), the strain and applied stress will be out of phase with each other, causing a phase shift in the strain and stress sine wave data. This shift is defined as a "phase angle" and along with sample geometry and driver energy input, is used to calculate viscoelastic properties of the sample. Elastic storage and loss (damping) moduli may be obtained isothermally (at one temperature) or tracked as the temperature is ramped. Glass transition temperature is obtained by ramping the temperature through the glass transition range and selecting the peak value on the loss modulus curve.

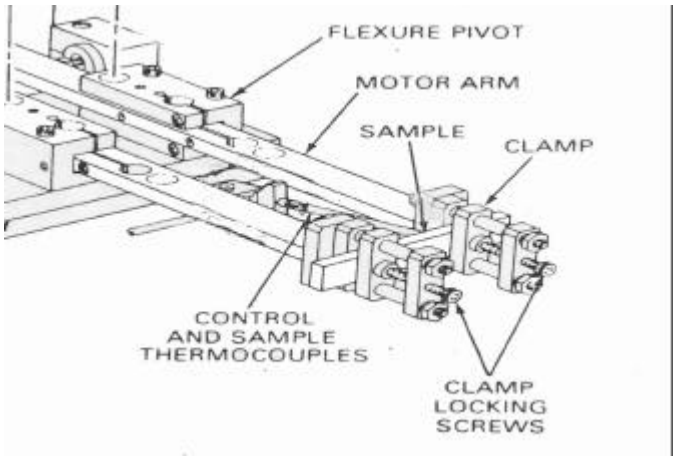

Figure 1. Schematic of a typical specimen clamped in the DMA.

NFESC is in the process of procuring a new DMA instrument with improved capabilities. The updated design of the new DMA incorporates 3-point bending technology (vice the 2-point bending of the DMA 983). This provides a much higher maximum force with which to flex the samples, resulting in improved accuracy and precision. Sufficient flexing force is considered especially important for particularly stiff materials such as composites

Description of tests

Scanning Electron Microscopy

One important aspect of accelerated testing is that the degradation mechanism must be understood in order to develop accelerated test methods. The mechanical and thermal tests performed after the sample has been removed give the amount of degradation but not what caused it. Scanning electron microscopy (SEM) may be necessary in order to identify what kind of degradation mechanism the specimen is undergoing. For instance, in the Porter and Barnes experiments [4], the critical component was the glass fibers. Eventually, the knowledge of this mechanism will help choose accelerated tests designed specifically for that type of degradation.

Another reason for the use of SEM is to make sure that the same degradation mechanism is present at any temperature since this is the basis of the applicability of the time-temperature principle. SEM has been extensively used to examine specimens following mechanical testing. Hoa et al. [11] used SEM to observe fractures surfaces to investigate changes in failure modes in carbon/PPS composites following environmental exposures. Sloan and Seymour [12] used SEM images to show fiber debonding in graphite/epoxy composites exposed to seawater. Ghosh and Bose [13] used SEM micrographs of glass/epoxy composites taken before and after exposure to corrosive environments to help determine the degradation due to the environments.

Dynamic Mechanical Analysis

Dynamic Mechanical Analysis (DMA) and Dynamic Mechanical Thermal Analysis (DMTA) are used to determine the change in mechanical properties of materials either under isothermal conditions or as a function of temperature. The technique is often used to measure the elastic storage modulus and damping properties of materials, as well as the glass transition temperature, T_g, of polymers. One possible analysis to consider is the relation between loss of mechanical properties and reduction in T_g.

The DMA Flexural Test will consist of:

1. Specimens will be analyzed in triplicate - three control pieces for each composite formulation and three salt-fog exposed pieces for each formulation, exposure temperature, and exposure duration. Thus, 3x8x3x3 or 216 specimens will be required for DMA analysis of the exposed samples.
2. Specimens will be nominally 0.5 inches wide and 0.125 inches thick. The length will be adjusted according to the clamping configuration of the DMA.
3. The DMA will be calibrated according to manufacturer specifications. “Length correction” calibration will be performed for each exposure scenario as needed. Length correction compensates for sample motion in stiff samples that penetrates beyond the clamp faces.
4. Fixed frequency and amplitude settings will be chosen for each composite formulation based on manufacturer recommendations for similar materials.
5. A point value for the elastic modulus of each specimen will be obtained by flexing the specimen at 73 F (or other selected temperature as appropriate). The values (in psi or

Pascal units) obtained for all of the specimens will be compiled into plots used to produce the time-temperature superimposed master curve described earlier.

6. If T_g values are desired, each specimen will be run through a ramped temperature range. The peak of the loss modulus curve is taken as the T_g. DMA analysis for T_g will take considerably longer than DMA analysis of elastic modulus near room temperature, due to the time required to run the temperature ramp program for each specimen.

Flexural Tests

Each of the exposed polymer composite strip types will be tested in triplicate for flexural strength using the method described in ASTM D 790 (Standard Test Methods for Flexural Properties of Un-reinforced and Reinforced Plastics and Electrical Insulating Materials). The test specimens are supported at two points (support span) and loaded in a conventional "three point loading" configuration.

Tensile Tests

The composite strips will be tested for tensile strength after exposure following ASTM D 3030 (Standard Test Method for Tensile Properties of Polymer Matrix Composite Materials).

CONCLUSIONS

It is proposed to conduct accelerated testing on fiber reinforced composites used in the Navy waterfront infrastructure. Accelerated testing will be completed under salt fog exposure at high temperatures up to 160°F. This data can be complemented by existing 12-month data at 95°F already obtained under a previous program. The accelerated testing will allow for prediction of damage to the composites beyond the first year and prediction of its service life.

REFERENCES

1. Jamond, R. M., Hoffard, T. A., Novinson, T., and Malvar, L. J., "Composites in Simulated Marine Environments," Special Publication SP-2083-SHR, Naval Facilities Engineering Service Center, Port Hueneme, California, May 2000.
2. Bank, L. C., Gentry, T. R., Barkatt, A., Prian, L., Wang, F., and Mangla, S. R., "Accelerated Aging of Pultruded Glass/Vinylester Rods," Second International Conference on Composites in Infrastructure, ICCI'98, Tucson, AZ, January 1998, pp. 423-437.
3. Aindow, A. J., Oakley, D. R., and Proctor, B. A., "Comparison of the Weathering Behavior of GFC With Predictions Made From Accelerated Aging Tests," Cement and Concrete Research, Vol. 14, No. 2, August 1983, pp. 271-274.

4. Porter, M. L., and Barnes, B. A., "Accelerated Aging Degradation of Glass Fiber Composites," Second International Conference on Composites in Infrastructure, ICCI'98, Tucson, AZ, January 1998, pp. 446-459.

5. Porter, M. L., Lorenz, E. A., Barnes, B. A., and Viswanath, K. P. "Thermoset Composite Concrete Reinforcement," Dept. of Civil and Construction Engineering, Engineering Research Institute, Iowa State University, Ames, IA, October 1992, 130 pp.

6. Allred, R. E., "The Effect of Temperature and Moisture Content on the Flexural Response of Kevlar/Epoxy Laminates: Part I [0/90] Filament Orientation," Journal of Composite Materials, Vol. 15, 1981, pp. 100-116.

7. Sen, R., Mariscal, D., and Shahawy, M., "Durability of Fiberglass Pretensioned Beams," ACI Structural Journal, Vol. 90, No. 5, 1993, pp. 525-533.

8. Jayamaran, K., Reifsnider, K. L., and Swain, R. E., "Elastic and Thermal Effects on the Interface: Part I. Comments on Characterization Methods," Journal of Composites Technology and Research, Vol. 15, No. 1, 1993, pp. 3-13.

9. Dye, W. K., Bakis, C. E., Nanni, A., "Accelerated Testing of Carbon FRP Tendon-Anchor Systems for Post-Stressed Concrete Applications," First International Conference on Durability of Composites for Construction, CDCC'98, Sherbrooke, Quebec, Canada, August 1998, pp. 463-473.

10. Gerritse, A., "Durability Criteria for Non-metallic Tendons in an Alkaline Environment," Advanced Composite Materials in Bridges and Structures, ACMBS I, (eds. K.W. Neale and P. Labossiere), CSCE, Montreal, 1992, pp. 129-138.

11. Hoa, S. V., Lin, S., and Chen, J. R., "Hygrothermal Effect on Mode II Interlaminar Fracture Toughness of a Carbon/Polyphenylene Sulfide Laminate," Journal of Reinforced Plastics and Composites, Vol. 11, 1991, pp. 3-31.

12. Sloan, F. E., and Seymour, R. J., "The Effect of Seawater Exposure on Mode I Interlaminar Fracture and Crack Growth in Graphite/Epoxy," Journal of Composite Materials, Vol. 26, 1992, pp. 2655-2673.

13. Ghosh, P., and Bose, N. R., "Comparative Evaluation of N-Glass and E-Glass Fibers with Special Reference to their Use in FRP Composites," Journal of Materials Science, Vol. 26, 1991, pp. 4759-4764.

APPENDIX - NUMERICAL EXAMPLE ON THE USE OF TIME-TEMPERATURE SUPERPOSITION

Assume that a particular composite has an original stiffness of 4. Assume also that the following values of its stiffness have been observed for three different temperatures and three different exposure durations.

95°F	T = 1 month	E = 3.96
	T = 2 months	E = 3.82
	T = 3 months	E = 3.75
120°F	T = 1 month	E = 3.86
	T = 2 months	E = 3.72
	T = 3 months	E = 3.50
160°F	T = 1 month	E = 3.72
	T = 2 months	E = 3.41
	T = 3 months	E = 3.35

After plotting these values on a logarithmic scale for both time and stiffness the following chart is obtained.

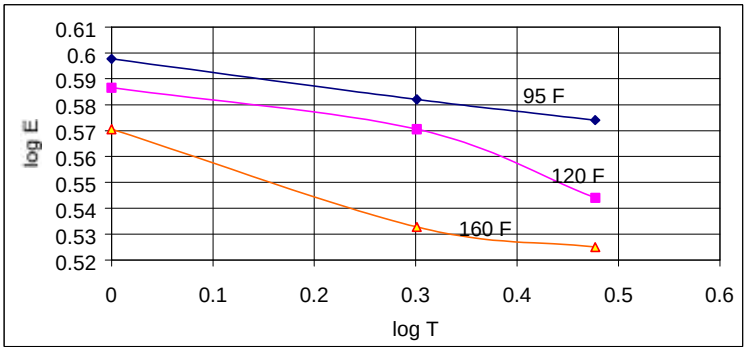

Since there is no data for 80°F (reference curve) behavior, the 95°F will temporarily be considered the reference temperature. The 120°F curve is shifted to the right 0.22 units until it is superimposed onto the reference curve. The 160°F curve requires a shift of 0.52 units to the right.

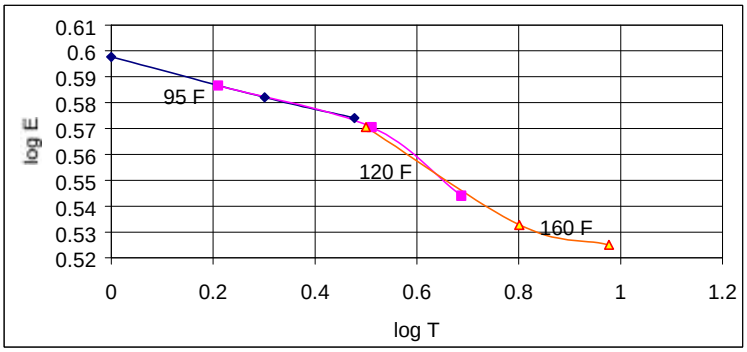

The shift factors used are plotted next, as a function of the absolute temperature (K). A W-M-L relation or an Arrhenius relation is used to describe the shift factor behavior. In this case, the Arrhenius behavior gave:

$$\log(a_t) = 4.9476 - \frac{1522.6}{T_K}$$

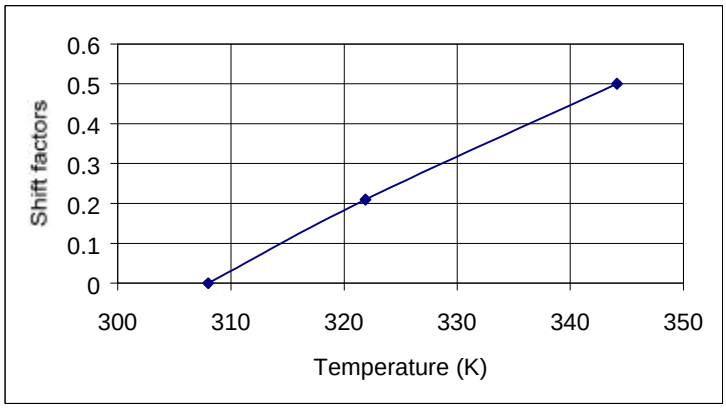

The assumed relation is used to find the shift factor necessary for an 80°F (299.7 K) curve. This shift is equal to –0.1328. Therefore, the reference curve will be shifted to the right 0.1328 units to become an 80°F curve, which will be the new master curve.

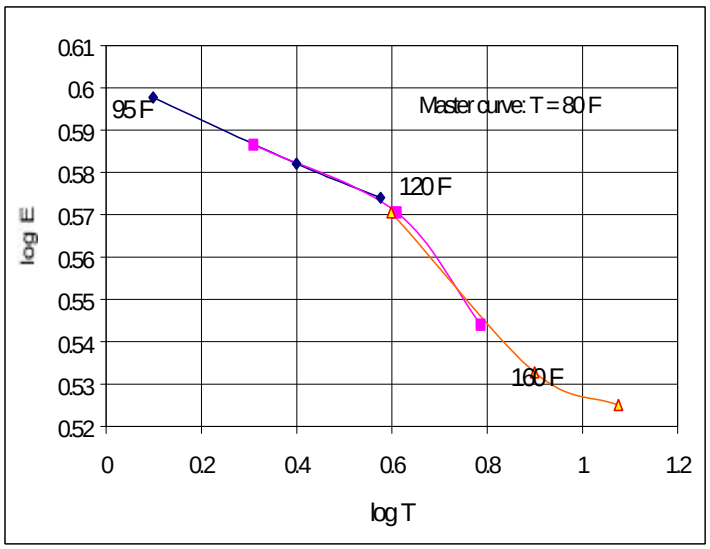

In the final curve, it can be seen that the time range now goes from log (t_0) = 0.13 to log (t_f) = 1.13. These correspond to 1.4 months and 13.5 months, respectively. This is 4.5 times longer than the original 3-month limit. Therefore, the exposure to 160°F yields an acceleration factor AF = 4.5 for a reference temperature of 80°F.

Extrapolation beyond these boundaries might lead to unrealistic results. Extension to longer time ranges will be possible if:

1. Lab data for longer periods is measured. Actually, longer exposure times will increase the accuracy of the computations, but what really will extend the measurable times are longer exposures for the *higher temperatures*. For instance, data for 160°F can be collected for 4, 6 or even more months.
2. More variability in the degradation is observed. In this case, more shifting will be necessary to superimpose the master curve. More shifting means more extension into time.